REVISIONS				
ZONE	REV	DESCRIPTION	DATE	APPROVED

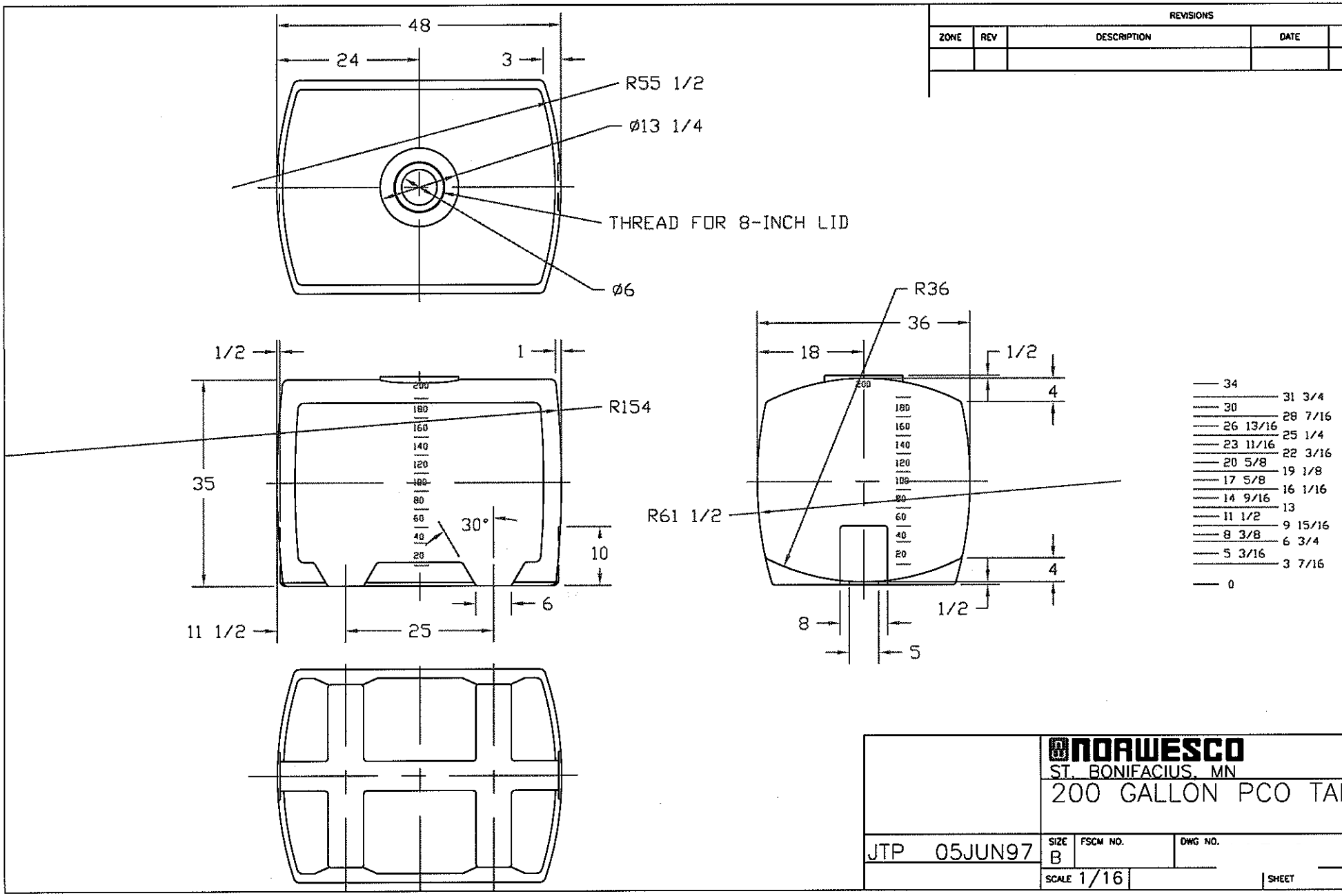

NORWESCO
ST. BONIFACIUS, MN

200 GALLON PCO TANK

JTP 05JUN97	SIZE B	FSCM NO.	DWG NO.	REV
	SCALE 1/16		SHEET	